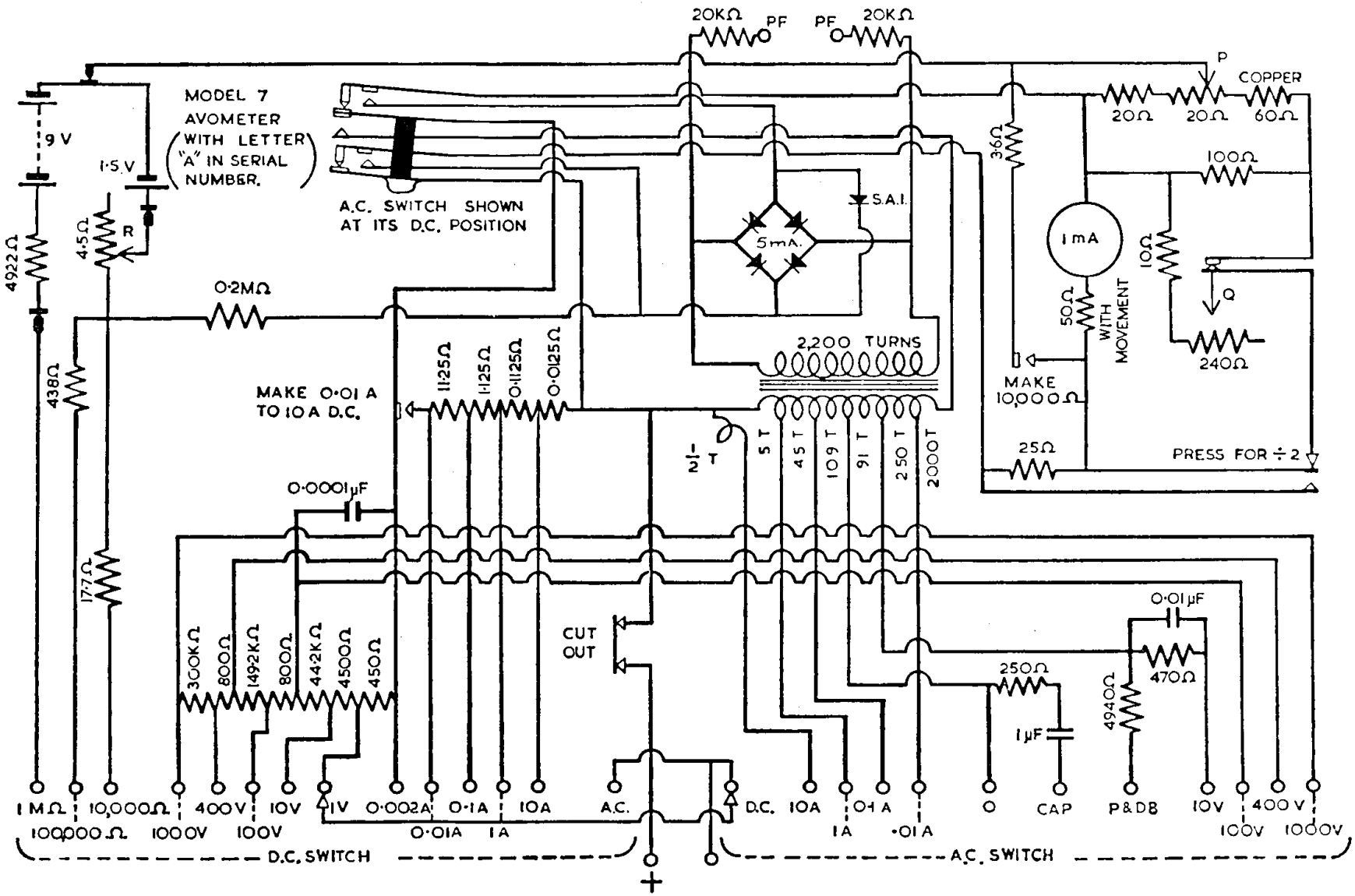

CIRCUIT DIAGRAM OF THE MODEL 7 AVOMETER MK. II